NTC Thermistors

APPLICATIONS

AUTOMOTIVE APPLICATIONS

NTC temperature sensors are widely used in motor vehicles. For example:

- Inlet air-temperature control
- Transmission oil temperature control
- Engine temperature control
- Airco systems
- Airbag electronic systems
- Temperature detection of laser diode in CD players for cars
- Frost sensors
- ABS
- BMS / charge plugs protection

DOMESTIC APPLIANCES

NTC temperature sensors are in virtually all equipment in the home where temperature plays a role. This includes:

- Fridges and freezers
- Cookers and deep-fat fryers
- Washing machines and dish washers
- Central-heating systems
- Air conditioning

INDUSTRIAL, TELECOMMUNICATIONS, CONSUMER

In switching, measuring and detection systems

- Process control
- Heating and ventilation
- Air conditioning
- Fire alarms
- Temperature protection in battery management / charging systems
- LCD contrast control in flat-panel displays, mobile phones and camcorders
- Temperature compensation of quartz oscillator frequency in, for example, mobile phones
- Ink-jet printer head temperature detection
- Video and audio equipment
- LED control circuits

SELECTION CHART

PRODUCT RANGE	OPERATING TEMP. RANGE (°C)	TOL. ON *R* (± %) OR ON T (± °C)	B TOL. (± %)	RESP. TIME (s)	MAX. Ø (mm)	LEAD		DOCUMENT NUMBER
						Ø (mm)	L (mm)	
Accuracy line								
NTCLE203E3	-40 to +125	(1 , 2, 3, 5) %	0.5 to 2.5	1.7	3.4	0.4	38 min.	29048
NTCLE100E3	-40 to +125	(2, 3, 5) %	0.5 to 3.0	1.2	3.8	0.6	17 min.	29049
NTCLE101E3...SB0	-40 to +125	0.5 °C	two-point sensors	1.2	3.3	0.6	17 min.	29046
NTCLE203E3...SB0	-55 to +150	0.5 °C	two-point sensors	1.7	4.2	0.5	41	29118
SMD versions								
NTCS0603E3	-40 to +150	(1, 2, 3, 5) %	1	-	-	-	-	29056
NTCS0402E3	-40 to +150	(1, 2, 3, 5) %	3	-	-	-	-	29003
NTCS0805E3	-40 to +150	(1, 2, 3, 5) %	1	-	-	-	-	29044
NTCS….E3…SMT	-40 to +125	1 %	1	-	-	-	-	29151

For technical questions, contact: nlr@vishay.com
THIS DOCUMENT IS SUBJECT TO CHANGE WITHOUT NOTICE. THE PRODUCTS DESCRIBED HEREIN AND THIS DOCUMENT ARE SUBJECT TO SPECIFIC DISCLAIMERS, SET FORTH AT www.vishay.com/doc?91000

NTC Thermistors

SELECTION CHART								
PRODUCT RANGE	OPERATING TEMP. RANGE (°C)	TOL. ON *R* (± %) OR ON T (± °C)	B TOL. (± %)	RESP. TIME (s)	MAX. Ø (mm)	LEAD		DOCUMENT NUMBER
						Ø (mm)	L (mm)	
Wire bondable die								
NTCC200 / NTCC300	-55 to +175	(1, 2, 3, 5) %	1	-	-	-	-	29153
Miniature accuracy line								
NTCLE300E3	-40 to +125	0.5 °C	1.2	1.2	2.4	AWG30	38	29051
NTCLE201E3	-40 to +125	0.5 °C	1.2	1.3	2.4	0.3	38	29051
NTCLE305E4	-40 to +125	0.5 °C	0.5 to 1	0.7	1.6	AWG32	41	29076
NTCLE413 / NTCLE428	-40 to +105	(1, 2, 3, 5) %	0.5 to 1.5	2.5	3	AWG30	40	29078
High temperature								
NTCSMELFE3	-40 to +150	5 %	1.3	0.9	1.7	-	-	29119
NTCLG100E2	-40 to +300	5 %	1.3	0.9	1.85	0.56 max.	25.4 min.	29050
Special long-leaded (UL 2468 PVC insulation)								
NTCLS100E3	-40 to +85	3 %	0.75 to 3	15	8	AWG24	400	29060
NTCLP100E3	-40 to +85	3 %	0.75 to 3	10	6	AWG24	400	29060
NTCLE400E3	-40 to +85	3 %	0.75 to 3	7	6	AWG24	400	29060
Ring tongue sensors								
NTCALUG02 series	-55 to +125	(1, 2) %	0.5	5	8.5	AWG32	45	29094
NTCALUG03 series	-40 to +125	(2, 3) %	0.5 to 1.5	5	5.5	AWG32	70	29114
NTCALUG01 series	-40 to +150	5 %	0.5	7.5	7.1	AWG24	38	29092
NTCALUG01T	-40 to +150 (long term)	2 %	0.5	7.5	7.1	AWG264	150	29164

Note

- A lot of application dedicated sensors NTCA (cap types, immersion types, screw types,…) are also proposed: the list is too long to be presented here. Please refer to www.vishay.com/thermistors/ntc

RANGE SUMMARY

ACCURACY LINE

NTCLE203E3 and NTCLE100E3

The flagship of our ranges. The accuracy Line sensors offer real value for money. They have low tolerances (as low as ± 1 % on the R_{25}-value and ± 0.5 % on the B-value) and an operating temperature range from -40 °C to +125 °C. In addition, they are very stable over a long life.

SURFACE-MOUNT TEMPERATURE SENSORS

NTCS0402, NTCS0603 and NTCS0805 series

Our surface mount NTC sensors for temperature sensing and compensation embody all the qualities of Vishay BCcomponents NTC technology. The sensors come in a full range of R_{25}-values from 2 kΩ to 680 kΩ with standard tolerances from 1 % to 5 %.

If special stability criteria are of application, our special series NTCS……SMT (1 R_{25} value per case) is highly recommended.

HIGH TEMPERATURE SENSORS

NTCSMELFE3 and NTCLG100E2

This range of high-quality glass-encapsulated NTC temperature sensors are price-competitive for general use. Not only can the leaded sensor be used at up to 300 °C, but their glass encapsulation makes them ideal for use in corrosive atmospheres and harsh environments. This makes them an attractive alternative to other more expensive sensing methods. Two types of small glass envelopes are available: SOD 27 for sensors with leads, and SOD 80 ('MELF' execution) for leadless, surface-mount sensors.

NTCSMELF and NTCLG are not recommended for automotive though.

AUTOMOTIVE SENSORS

NTCLE203E3...SB0

These components are designed for all automotive applications (especially ECT sensors). Their coating is withstanding harsh potting conditions. These components are compliant to the AEC-Q200 norm.

For technical questions, contact: nlr@vishay.com
THIS DOCUMENT IS SUBJECT TO CHANGE WITHOUT NOTICE. THE PRODUCTS DESCRIBED HEREIN AND THIS DOCUMENT ARE SUBJECT TO SPECIFIC DISCLAIMERS, SET FORTH AT www.vishay.com/doc?91000

NTC Thermistors

MINIATURE CHIP ACCURACY LINE

NTCLE201E3
NTCLE300E3
NTCLE305E4

These sensors combine the features of the accuracy line with non-insulated or insulated leads for remote sensing applications.

SPECIAL LONG-LEADED SENSORS

NTCLS100E3
NTCLP100E3
NTCLE400E3

For special applications we can supply three types of long-leaded sensors: water-resistant sensors for use in humid conditions, pipe sensors for use in corrosive atmospheres and epoxy-coated sensors for general use.

SURFACE TEMPERATURE SENSORS

NTCALUG01
NTCALUG01T
NTCALUG02
NTCALUG03

NTCALUG02 and NTCALUG03 measure surface temperature with small gradients (difference between surface and NTC element temperature) due to low thermal conductivity of the nickel wire.

NTCALUG01T is a rugged product developed to withstand temperatures as high as 150 °C during thousands of hours without any wear out sign (no insulation resistance loss).

HOW NTC TEMPERATURE SENSORS WORK

NTC temperature sensors are made from a mixture of metal oxides which are subjected to a sintering process that gives them a negative electrical resistance versus temperature (*R*/T) relationship such as that shown in Fig. 1.

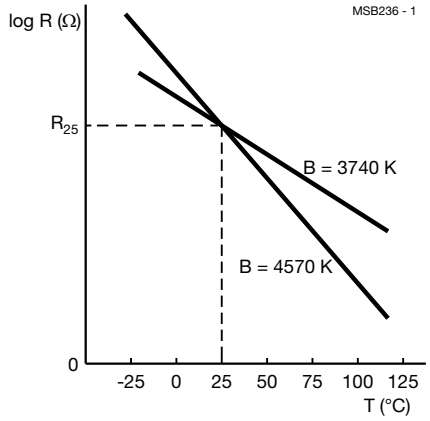

Fig. 1 - Typical resistance as a function of temperature for an NTC temperature sensor

The relatively large negative slope means that even small temperature changes cause a significant change in electrical resistance which makes the NTC sensor ideal for accurate temperature measurement and control.

The main electrical characteristics of an NTC ceramic temperature sensor are expressed by three important parameters and their tolerances (see below).

IMPORTANT NTC PARAMETERS	
PARAMETER	**DESCRIPTION**
R_{25}	The resistance of the sensor in Ω at the reference temperature of 25 °C
B-value	A material constant, expressed in Kelvin
α	The temperature coefficient of resistance expressed in %/K or in %/°C

RESISTANCE R_{25} AT 25 °C (298.15 K)

The resistance at 25 °C (substantially at room temperature) provides a convenient reference point for thermistors. Tolerances on R_{25} are due mainly to variations in ceramic material manufacture and tolerances on chip dimensions. Through the use of highly homogeneous material compositions and proprietary ceramic sawing techniques allowing precise control of chip dimensions, products are available with tolerances on R_{25} lower than 1 %.

For technical questions, contact: nlr@vishay.com
THIS DOCUMENT IS SUBJECT TO CHANGE WITHOUT NOTICE. THE PRODUCTS DESCRIBED HEREIN AND THIS DOCUMENT ARE SUBJECT TO SPECIFIC DISCLAIMERS, SET FORTH AT www.vishay.com/doc?91000

NTC Thermistors

MATERIAL CONSTANT B

B is a material constant that controls the slope of the R_T characteristic (see Fig. 1) which can, at least to a first approximation, be represented by the formula:

$$R_T = R_{25}\exp\left\{B\left(\frac{1}{T} - \frac{1}{298.15}\right)\right\} \quad (1)$$

Where T is the absolute temperature of the sensor.

In practice, B varies somewhat with temperature and is therefore defined between two temperatures 25 °C and 85 °C by the formula:

$$B_{25/85} = \ln\left(\frac{R_{85}}{R_{25}}\right) \Big/ \left(\frac{1}{358.15} - \frac{1}{298.15}\right) \quad (2)$$

$B_{25/85}$ (expressed in K) is normally used to characterize and compare different ceramics. Tolerance on B (or $B_{25/85}$) is caused mainly by material composition tolerances and sintering conditions. The latest materials offer tolerances as low as ± 0.3 % on some specific $B_{25/85}$ values.
In most cases, better fitting curves than pure exponential are required to measure the temperature accurately; see formula (1). That is why each NTC material curve is defined by a 3rd order polynominal, as shown below:

$$R_T = R_{25}\exp[A + B/T + C/T^2 + D/T^3] \quad (3)$$

or inversely expressing T as a function of R_T:

$$T = \frac{1}{\left[A_1 + B_1\ln\left(\frac{R_T}{R_{25}}\right) + C_1\ln^2\left(\frac{R_T}{R_{25}}\right) + D_1\ln^3\left(\frac{R_T}{R_{25}}\right)\right]} \quad (4)$$

The two approximations (3) and (4) represent the real material curves with an error smaller than 0.1 % at any given temperature.
The values of the coefficients A, B, C, D, A_1, B_1, C_1 and D_1 are given in some datasheets as NTCLE100E3 and in the *R*-T computation sheets, which can be downloaded from the website:
www.vishay.com/thermistors/curve-computation-list

SENSOR TOLERANCES

The total tolerances of the NTC sensor over its operating temperature range is a combination of the tolerances on R_{25} and on B-value given by the formula:

$$\frac{\Delta R}{R} = \frac{\Delta R_{25}}{R_{25}} + \Delta B\left|\frac{1}{T} - \frac{1}{298.15}\right| \quad (5)$$

Fig. 2 is a graphical representation of this formula which shows a minimum at 25 °C since this is the temperature at which the sensor is calibrated. Above and below this temperature, the tolerances increase due to the increasing tolerances on B-value, giving the graph a "butterfly" shape.

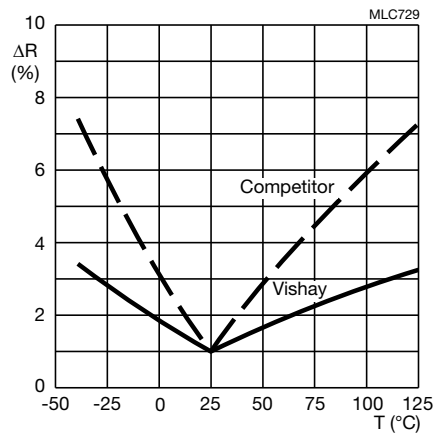

Fig. 2 - Typical resistance change as a function of temperature for a 1 % Vishay NTC temperature sensor compared to a 1 % sensor with a higher B-tolerance

The exceptionally low ΔB-value of the Vishay BCcomponents sensor compared with those of typical competitors (see Fig. 2) gives a flatter Δ*R*/*R* "butterfly" curve which means you can get more accurate temperature measurements using Vishay BCcomponents NTC temperature sensors.

For technical questions, contact: nlr@vishay.com
THIS DOCUMENT IS SUBJECT TO CHANGE WITHOUT NOTICE. THE PRODUCTS DESCRIBED HEREIN AND THIS DOCUMENT ARE SUBJECT TO SPECIFIC DISCLAIMERS, SET FORTH AT www.vishay.com/doc?91000

NTC Thermistors

TEMPERATURE COEFFICIENT OF RESISTANCE

The temperature coefficient of resistance α expresses the sensitivity of a sensor to temperature changes. It is defined as:

$$\alpha = \frac{1}{R} \times \frac{\Delta R}{\Delta T} \quad (6)$$

Using formula to eliminate *R* this can be re-expressed as:

$$\alpha = \frac{\Delta B}{T^2} \quad (7)$$

Which means that the relative tolerance on α is equal to the relative tolerance on B-value.

THERMAL STABILITY

The stability of an NTC temperature sensor is expressed in terms of the maximum shift in its electrical properties, R_{25} and B-values after it has been subjected to an extended period at its limit operating conditions. Fig. 3, for example, shows the long-term deviation of R_{25} and B-value for a standard lacquered component from the NTCLE100E3 series with an R_{25} of 10 kΩ.

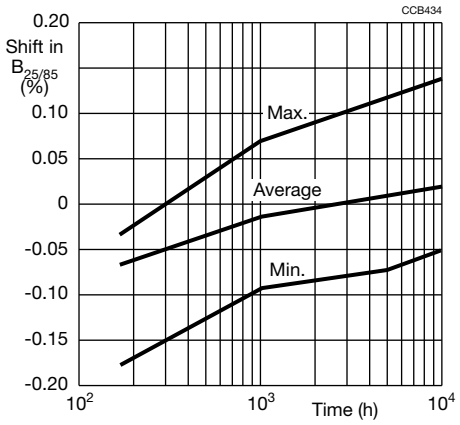

Fig. 3 - Aging characteristics (dry heat at 150 °C of a NTCLE100E3 series NTC temperature sensor with an R_{25} of 10 kΩ

TEMPERATURE CYCLING

Another important criterion for assessing the performance of an NTC sensor throughout its operational life is its resistance to thermal cycling. To assess this, products are subjected to rapid temperature variations covering the extremes over which they are expected to operate until failure is induced.

These tests fully demonstrate the high reliability of our products: our soldered types (for example NTCLE300E3 types) withstanding more than 5000 cycles, and our glass encapsulated types (NTCLG100E2) more than 100 000 cycles without failure.

THERMAL TIME CONSTANT AND RESPONSE TIME

The speed of response of an NTC sensor is characterized by its time constant. This is the time for the sensor's temperature to change by 63.2 % (i.e. 1 to 1/e) of the total change that occurs when the sensor is subjected to a very rapid change in temperature.

The conditions under which the time constant is measured are important. Two are normally considered:

- Ambient change: the component is initially in still air at 25 °C. Then quickly immersed in a fluid at 85 °C. The fluid is usually silicone oil but other fluids, e.g. water for washing machine applications, air for tumble dryers can also be specified.
- Power-on / power-off conditions: the component is heated by applying electrical power in still air to an equivalent temperature of 85 °C after which electrical power is removed and cool-down time is measured at 63.2 % of the temperature difference.

Fig. 4 represents the typical voltage drop variation over a boiler sensor experiencing a transition from air at 25 °C to the temperature of boiling water. The graph shows a response time of about 4 s when the measured voltage corresponds to an equivalent temperature of 72.4 °C.

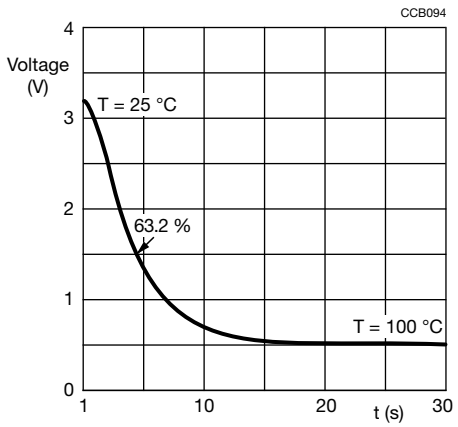

Fig. 4 - Typical output of a boiler sensor undergoing a sudden temperature transition from 25 °C to 100 °C

ADVANCED DEVELOPMENT AND HIGH-TECHNOLOGY MANUFACTURE

The high accuracy of our NTC temperature sensor series is principally a result of advanced development and high-technology manufacture.

For technical questions, contact: nlr@vishay.com
THIS DOCUMENT IS SUBJECT TO CHANGE WITHOUT NOTICE. THE PRODUCTS DESCRIBED HEREIN AND THIS DOCUMENT ARE SUBJECT TO SPECIFIC DISCLAIMERS, SET FORTH AT www.vishay.com/doc?91000

NTC Thermistors

ADVANCED DEVELOPMENT

Audits of our factory by major customers especially in the automotive industry regularly award us top marks. This is the result of strong commitment to development and heavy investment in personnel and equipment. Only by such commitment have we been able to develop new and better materials with B-value tolerances as low as 0.3 %.

HIGH-TECHNOLOGY MANUFACTURE

Our most significant improvement in NTC temperature sensor manufacture has come through the use of precision sawing. This gives much better control over repetitive R_{25}-value than the earlier pressing or tape casting techniques and has allowed us to achieve R_{25} tolerances lower than 1 %. After manufacture, we electrically test every one of our NTC temperature sensors at reference or other temperatures.

COMPONENT QUALITY, OUR GUARANTEE OF EXCELLENCE

As you expect from a world-class electronic components manufacturer, quality is an integral part of our company's make-up. It is reflected in our ISO-TS 16949 approved organizations, all of which operate according to the principles of TQM (Total Quality Management). It is reflected too in the way we act, think and do business. Quality, in fact, is the essence of what we have to offer: not just in our products but in our customer service and customer relations as well.

Our quality assurance system is based on the following principles:

- Total quality management involving careful design and thorough investigation of conformance and reliability before release of new products and processes.
- Careful control of purchased materials and manufacturing process steps. This is mainly achieved by strict implementation of Statistical Process Control (SPC) to detect and eliminate adverse manufacturing trends before they become significant.
- Electrical inspection of significant characteristics with a target of zero defects in our delivered sensors.
- Statistical inspection of outgoing batches and periodic reliability checks aimed at collecting trend information, which is steered towards Quality improvement.
- Quality assurance at Vishay BCcomponents goes further, however. Batch tests under extreme climatic conditions are designed to test our sensors to destruction. Results clearly indicate that Vishay BCcomponents NTC sensors provide reliable performance over a long lifetime. A fact that has been verified by ppm figures obtained from many years of close cooperation with major customers in all sectors of industry. Proving conclusively that Vishay BCcomponents NTC temperature sensors offer unsurpassed levels of quality and reliability in the field.

SELECTING AN NTC TEMPERATURE SENSOR

STEP 1

Decide on the sensor series you need from the "Selection Chart"

Your choice depends on the operating temperature range and other criteria such as:

- Accuracy
- Product size
- Required mechanical execution i.e. naked chip, SMD, epoxy coated, molded, surface sensor or glass sealed
- Lead length and diameter.

STEP 2

Decide on the value of R_{25} you need. Refer to the R/T characteristics of the sensor series you chose in Step 1. In these characteristic curves, each sensor in the series is distinguished by its R_{25}-value. Choose an R_{25}-value to give a resistance at your average temperature of operation of between 1 kΩ and 100 kΩ or the value that best fits your electronic measuring circuit voltage and current range.

STEP 3

Determine the tolerance on R_{25}. Generally, you will know the accuracy of ΔT at which the temperature should be measured in your application. The relative tolerance ($\Delta R/R$) on sensor resistance is then: $\Delta R/R = \alpha \times \Delta T$ in which "α" is the temperature coefficient of resistance; see section "Temperature Coefficient of Resistance". To calculate the relative tolerance on R_{25} ($\Delta R_{25}/R_{25}$), simply subtract from $\Delta R/R$ the ΔR tolerance due to B-value.

STEP 4

Using the R/T tables of the respective datasheets, select the sensor from the series meeting your requirements on $\left(\frac{\Delta R_{25}}{R_{25}}\right)$ calculated in step 3.

Use the R_T computation files, which can be downloaded from the website for most of the NTC thermistors (leaded or SMD) at
www.vishay.com/thermistors/curve-computation-list

STEP 5

For other important requirements such as response time and length of component, refer to the "Selection Chart".

Although the standard range gives the narrowest tolerances at 25 °C , we can on request, adapt our manufacturing processes to provide products with the narrowest tolerance at any temperature of your choice. Please pass your request through your local Vishay sales organization.

For technical questions, contact: nlr@vishay.com
THIS DOCUMENT IS SUBJECT TO CHANGE WITHOUT NOTICE. THE PRODUCTS DESCRIBED HEREIN AND THIS DOCUMENT ARE SUBJECT TO SPECIFIC DISCLAIMERS, SET FORTH AT www.vishay.com/doc?91000

NTC Thermistors

EXAMPLES ON HOW TO SELECT

EXAMPLE 1

A leaded NTC sensor is required for sensing temperatures in refrigerator and freezer compartments with a temperature accuracy of 0.5 °C over the whole temperature range of -25 °C to +10 °C. Over this temperature range, the circuit design requires that the resistance should be maintained between 2 kΩ and 30 kΩ.

Step 1

Choose the execution. Since temperature has to be measured with high accuracy, small diameter nickel leads are recommended. Their low heat conductivity effectively isolates the component from the outside world, enabling it to accurately monitor the temperature of the freezing compartments. From the "Selection Chart" it can be seen that NTCLE203E3 series components are the most suitable choice.

Step 2

Refer to the NTCLE203E3 series datasheet specifications. The component meeting the requirement that the resistance should be maintained between 2 kΩ to 30 kΩ is a NTCLE203E3202xB0 type (x indicating the tolerance).

Step 3

Calculate the required tolerance on R_{25}. Knowing that $\Delta T = \pm 0.5$ K and taking values for α at -25 °C and 10 °C from the NTCLE203E3 specifications:

$$\frac{\Delta R}{R} = 5.42 \times 0.5 = 2.71\ \%\ \text{at -25 °C}$$

$$\frac{\Delta R}{R} = 4.26 \times 0.5 = 2.13\ \%\ \text{at 10 °C}$$

To calculate the relative tolerance on R_{25} ($\Delta R_{25}/R_{25}$), simply subtract from $\Delta R/R$, the ΔR tolerance due to B-value at these two temperatures obtained from this datasheet.

$$\frac{\Delta R_{25}}{R_{25}} = 2.71\ \% - 1.19\ \% = 1.52\ \%\ \text{at 25 °C}$$

$$\frac{\Delta R_{25}}{R_{25}} = 2.13\ \% - 0.31\ \% = 1.82\ \%\ \text{at +10 °C}$$

Take the minimum which gives an R_{25} tolerance of 1 %. The selected component is therefore NTCLE203E3202FB0.

Step 4

Not applicable.

Step 5

Suppose now that the required $\Delta R_{25}/R_{25}$ had been less than 1 %. Though no standard product meets that requirement, it's nevertheless possible to specify custom products with a different reference point, e.g. 0 °C instead of 25 °C that meet narrower tolerance specifications.

EXAMPLE 2

Designing a fast-charging circuit for nickel hydride cells. During fast charging, the rate of temperature rise of the cells must be monitored. If this reaches 1 K/min with a tolerance of ± 10 %, the circuit must switch from fast charging to trickle charge. Ambient temperature must be between 10 °C to 45 °C to allow fast charging and the backup cut-off temperature (above which charging is completely switched off) is fixed at 60 °C. Temperatures are expected to be measured with an accuracy of ± 2 °C.

Step 1

Surface-mount products can be used for this application. Since SMDs for relatively low temperatures are needed, refer to the NTCS series rather than NTCSMELF series.

Step 2

Choose the R_{25} of the component. From the R/T specifications of the NTCS series, it can be seen that a type with an R_{25} = 100 kΩ is suitable i.e. NTCS0603E3104xXT.

Step 3

It is possible to choose R_{25} tolerance from 1 % to 5 %. Looking in the R-T computation curve for NTCS0603 100 kΩ, we have an accuracy at 60 °C of 1.73 °C for a R_{25} tolerance of ± 5 %, an accuracy of 1.19 °C for a R_{25} tolerance of ± 3 %. We choose thus a R_{25} tolerance of ± 5 %.

Step 4

The optimal sized sensor with good accuracy to choose is therefore the NTCS0603E3104JXT.

Step 5

Verify now that the selected component fulfills the requirement with regard to rate of temperature rise ($\Delta T/\Delta t$), from section "Temperature Coefficient of Resistance":

$$\frac{\Delta R}{\Delta t} = \alpha R \frac{\Delta T}{\Delta t}$$

So to assure a maximum rate of temperature rise of 1 K/min we get (taking the α and R -values at 60 °C from the specifications):

$$\frac{\Delta R}{\Delta T} = \frac{3.70}{100} \times 23\,820 = -\ 881\ \Omega/\text{min}$$

This is verified by measuring the rate of change of voltage (dV/dt) across the sensor at constant current I. The rate of change of resistance $\Delta R/\Delta t$ can then be determined (= 1/I $\Delta V/\Delta t$).

At the same temperature, an NTC sensor with R and B-values at the extremes set by the sensor tolerances will have:

A resistance of 23 820 x (1 - 6.40/100) = 22 296 Ω

an α of - 3.70 x (1 - 1/100) = -3.66 % K
(tolerance on α = tolerance on $B_{25/85}$).

So the same $\Delta R/\Delta t$, i.e. - 881 Ω/min in this extreme component will limit the maximum rate of temperature rise $\Delta T/\Delta t$ to 881 x 100/3.66 x 1/22 296 = 1.082 K/min which still falls within the tolerance of ± 10 % allowed on the rate of temperature rise (1 K/min + 10 % = 1.1 K/min).

For technical questions, contact: nlr@vishay.com
THIS DOCUMENT IS SUBJECT TO CHANGE WITHOUT NOTICE. THE PRODUCTS DESCRIBED HEREIN AND THIS DOCUMENT ARE SUBJECT TO SPECIFIC DISCLAIMERS, SET FORTH AT www.vishay.com/doc?91000

NTC Thermistors

APPLICATION GROUPING

Applications of Vishay's NTCs may be classified into two main groups depending on their physical properties:

1. Temperature sensors: applications in which the sensitive change of the resistance versus the temperature is used, shown in the formula:

   $R = f(T)$

   This group is split into two subsections:

   a. The temperature of the NTC thermistor is determined only by the temperature of the ambient medium.

   b. The temperature of the NTC thermistor is also determined by the power dissipation in the NTC thermistor itself.

2. Time delay thermistors: applications in which the time dependence is decisive, when the temperature is considered as a parameter and is written:

   $R = f(t)$

   This group comprises all applications which make use of the thermal inertia of NTC thermistors.

The classifications mentioned are supported by practical examples in Fig. 5 to 17.

EXAMPLES

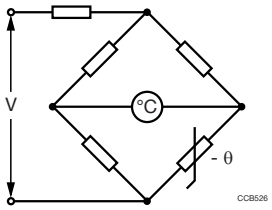

Fig. 5 - Temperature measurement in industrial and medical thermometers

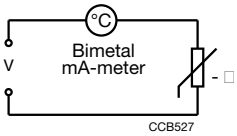

Fig. 6 - Car cooling water temperature measurement with bimetal

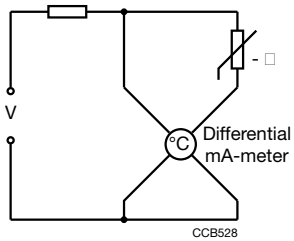

Fig. 7 - Car cooling water temperature measurement with differential mA-meter

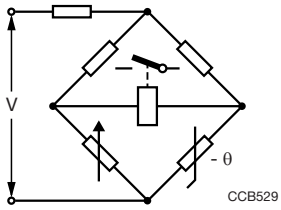

Fig. 8 - Temperature measurement with a bridge incorporating an NTC thermistor and a relay or a static switching device

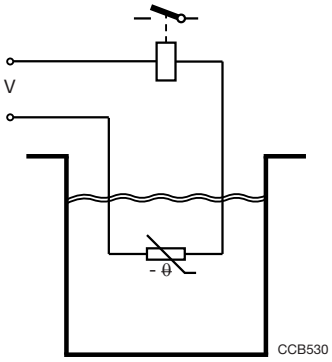

Fig. 9 - Liquid level control

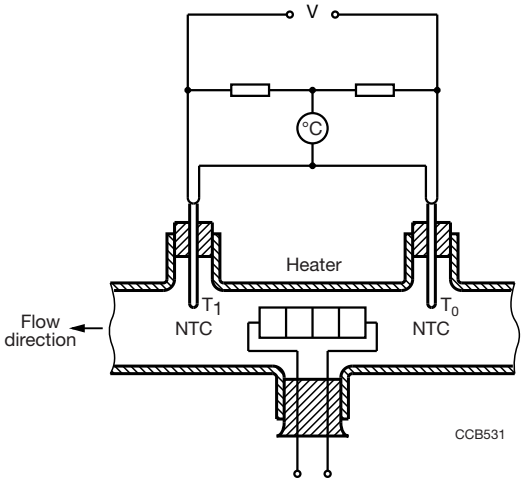

Fig. 10 - Flow measurement of liquids and gases.
The temperature difference between T_1 and T_0 is a measure for the velocity of the fluid or gas.

For technical questions, contact: nlr@vishay.com
THIS DOCUMENT IS SUBJECT TO CHANGE WITHOUT NOTICE. THE PRODUCTS DESCRIBED HEREIN AND THIS DOCUMENT ARE SUBJECT TO SPECIFIC DISCLAIMERS, SET FORTH AT www.vishay.com/doc?91000

NTC Thermistors

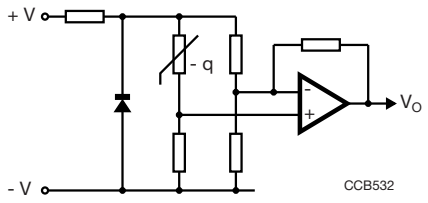

Fig. 11 - Temperature sensing bridge with op-amp which acts as differential amplifier. The sensitivity can be very high

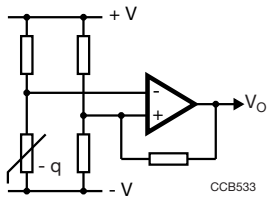

Fig. 12 - Basic temperature sensing configuration. The op-amp acts as a Schmitt-trigger. The transfer characteristic is shown in Fig. 13

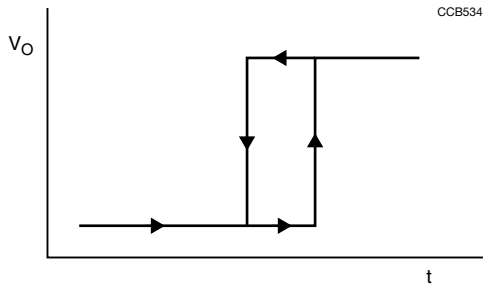

Fig. 13 - Transfer characteristic of the circuit shown in Fig. 12

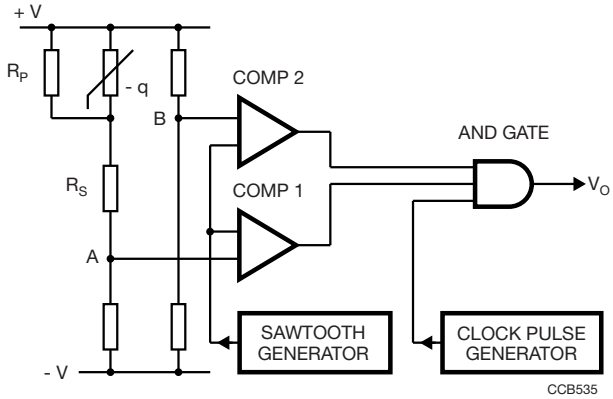

Fig. 14 - Temperature sensing bridge with 0 °C offset and ADC. Due to R_P and R_S the voltage at A varies linearly with the NTC thermistor temperature. The voltage at B is equal to that at A when the NTC thermistor temperature is 0 °C. Both voltages are fed to the comparator circuit. See also Fig. 15

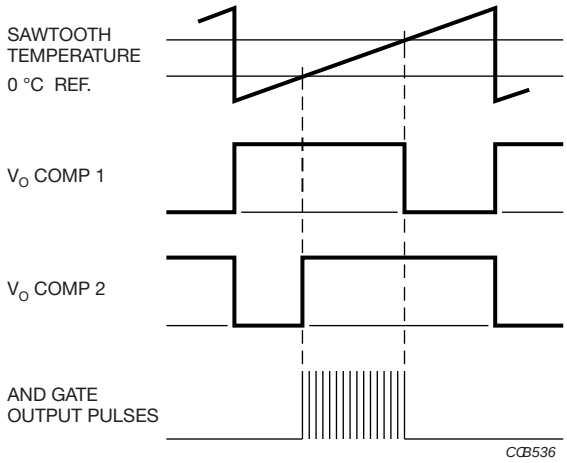

Fig. 15 - Pulses occurring at various points in the circuit shown in Fig. 14

THIS DOCUMENT IS SUBJECT TO CHANGE WITHOUT NOTICE. THE PRODUCTS DESCRIBED HEREIN AND THIS DOCUMENT ARE SUBJECT TO SPECIFIC DISCLAIMERS, SET FORTH AT www.vishay.com/doc?91000

NTC Thermistors

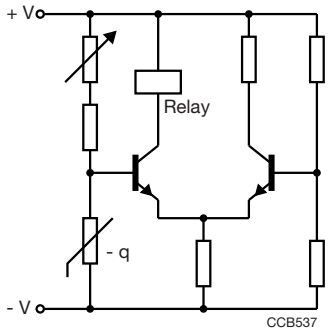

Fig. 16 - Simple thermostat

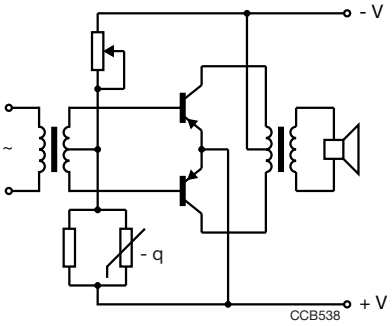

Fig. 17 - Temperature compensation in transistor circuits. Push-pull compensation

NTC TEMPERATURE SENSORS USED AS A THERMAL SWITCH

A common use of an NTC temperature sensor is in one of the bridge arms of a thermal switch circuit using an operational amplifier such as the μA 741. Fig. 18 shows a typical thermal switch circuit for a refrigerator thermostat. The circuit consists of a 10 V_{DC} zener diode stabilized power supply, a wheatstone bridge (containing the NTC temperature sensor) and an integrated comparator circuit controlling a triac. The circuit is designed to switch a maximum load current of 2 A off at -5 °C and on at +5 °C.

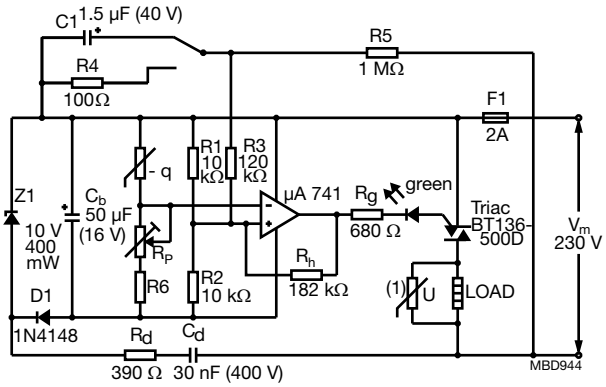

Fig. 18 - Refrigerator thermostat using an NTC temperature sensor

HEAT DETECTION IN FIRE ALARMS

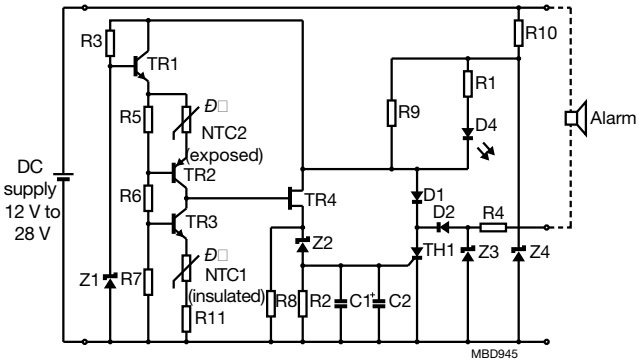

Fig. 19 - Circuit diagram of a typical heat detector using a matched pair of NTC thermistors

FAST CHARGING CONTROL WITH NTC TEMPERATURE SENSING

Fig. 20 shows the circuit diagram of an intelligent charged designed to charge, within 1 h, a NiCd or NiMH.

An NTC thermistor, together with fixed resistors R_{T1} and R_{T2}, is used in a voltage divider between V_{CC} and the current sense resistor input V_{SNS} of the IC. At the beginning of a new charge cycle, the IC checks if the voltage $V_{TEMP} = V_{TS} - V_{SNS}$ is within the limits designed by the IC manufacturer (low temperature: 0.4 V_{CC} and high temperature: 0.1 V_{CC} + 0.75 V_{TCO}). V_{TCO} is a cut of threshold defined by external resistors (not represented in Fig. 1): if after starting the fast charge phase, V_{TEMP} becomes lower than V_{TCO}, then the return to trickle mode is operated.

During the fast charge period, the IC samples the voltage V_{TEMP} and the return to trickle mode can also be operated when the variation in time of V_{TEMP} is going over a threshold.

This is called the $\Delta T/\Delta t$ termination: each 34 s, V_{TEMP} has fallen by 16 mV ± 4 mV compared to the value measured two samples earlier, then the fast charge is terminated.
For further information refer to Application Note "Fast Charging Control with NTC Temperature Sensing" (www.vishay.com/doc?29089)

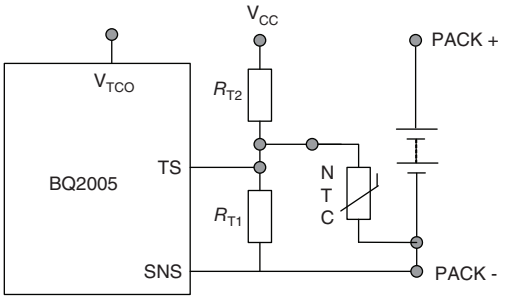

Fig. 20 - BQ2005

For technical questions, contact: nlr@vishay.com
THIS DOCUMENT IS SUBJECT TO CHANGE WITHOUT NOTICE. THE PRODUCTS DESCRIBED HEREIN AND THIS DOCUMENT ARE SUBJECT TO SPECIFIC DISCLAIMERS, SET FORTH AT www.vishay.com/doc?91000

NTC Thermistors

GLOSSARY OF TERMS

RESISTANCE

Also called nominal resistance. Formerly specified at only one temperature, or sometimes at two or maximum three. Now new technologies allow the specification of resistance values on all applicable temperature ranges for several types.

TOLERANCE ON RESISTANCE

The limits of the values that the resistance can take at the reference temperature.

B-VALUE

The B-value (expressed in K) may be calculated using the following formula:

$$\frac{\ln(R_1/R_2)}{1/T_1 - 1/T_2}$$

where R_1 and R_2 are the nominal values of resistance at T_1 and T_2 respectively (T expressed in K).

TOLERANCE ON B-VALUE

The limits of the value that B can take due to process and material variations.

R-TOLERANCE DUE TO B-DEVIATION

Due to the tolerance on the B-value, the limits of the value that *R* can take at a certain temperature increase with the difference of that temperature to the reference temperature.

TOLERANCE ON *R* AT A TEMPERATURE DIFFERENT TO T_{REF}

The sum of the tolerances on resistance and tolerance due to B-deviation.

α-VALUE OR TEMPERATURE COEFFICIENT

Variation of resistance (in %/K) for small variations of temperature (1 °C or 1 K) around a defined temperature.

MAXIMUM POWER DISSIPATION AND ZERO POWER

Maximum power which could be applied without any risk of failure. The maximum dissipation of an NTC thermistor is derated in function of ambient temperature. At low temperatures a certain dissipation can generate high voltages across the sensor which are not allowed. Zero-power is practically limited to less than 1 % of maximum specified power dissipation only for low self-heating by measuring current.

DISSIPATION FACTOR

Due to electrical power dissipated in the NTC thermistor, its average body temperature will rise. The dissipation factor equals the electrical power that is needed to raise the average body temperature of the NTC with 1 K. It is expressed in mW/K. The smaller the dissipation factor, the more sensitive the NTC thermistor is for self-heating by current injection.

HOW TO MEASURE NTC THERMISTORS

The published R_T-values are measured at the temperature T.

The published B-value at 25 °C is the result of the measurement at 25 °C and that at 85 °C. Hence, these values should be used when checking.

The following general precautions have to be taken when measuring NTC thermistors:

- Never measure thermistors in air; this is quite inaccurate and can give deviations of more than 1 K. For measurements at room temperature or below, use low viscosity silicone oil, purified naphta or some other non-conductive and non-aggressive fluid. For higher temperatures use oil, preferably silicon oil.
- Use a thermostatic liquid bath with an accuracy and repeatability of better than 0.1 °C. Even if the fluid is well stirred, there is still a temperature gradient in the fluid. Measure the temperature as close as possible to the NTC.
- After placing the NTC in the thermostatic bath, wait until temperature equilibrium between the NTC and the fluid is obtained. For some types this may take more than 1 min. Make sure that the NTC sensor is at an adequate depth below the fluid level, as ambient temperature can be conducted though wires or clamps to the sensing element.
- Keep the measuring power as low as possible, otherwise the NTC will be heated by the measuring current. Miniature NTC thermistors are especially sensitive in this respect. Measuring power of less than 5 % of the dissipation factor in the used medium is recommended, which gives self-heating of less than 0.05 °C.

For technical questions, contact: nlr@vishay.com
THIS DOCUMENT IS SUBJECT TO CHANGE WITHOUT NOTICE. THE PRODUCTS DESCRIBED HEREIN AND THIS DOCUMENT ARE SUBJECT TO SPECIFIC DISCLAIMERS, SET FORTH AT www.vishay.com/doc?91000